# Round Cube RELAX *Scale 1:40*

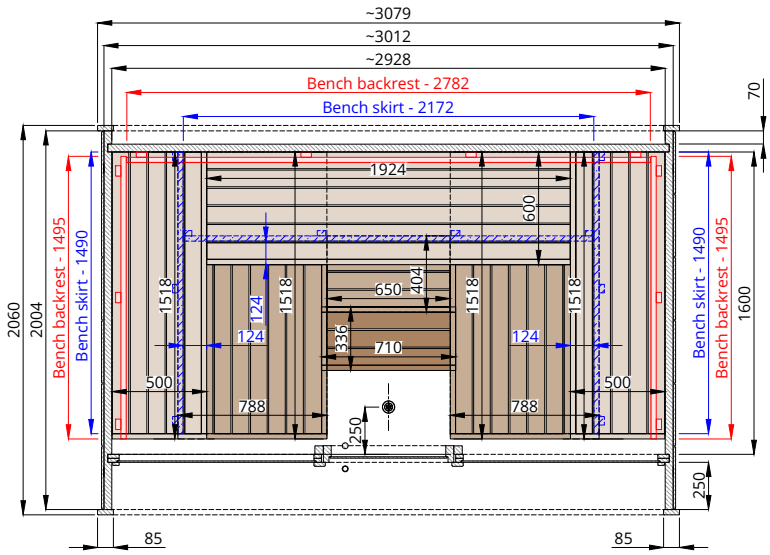


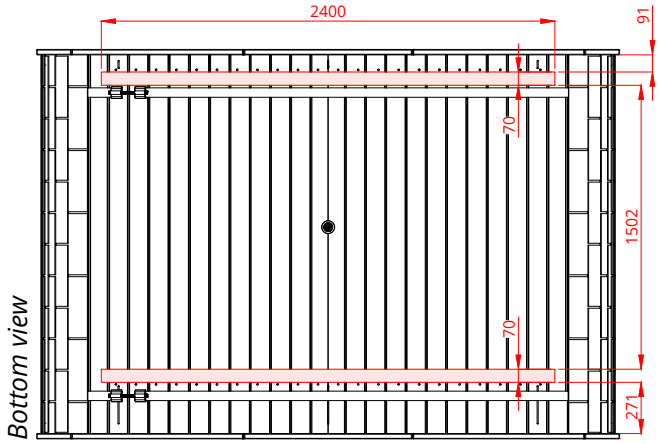


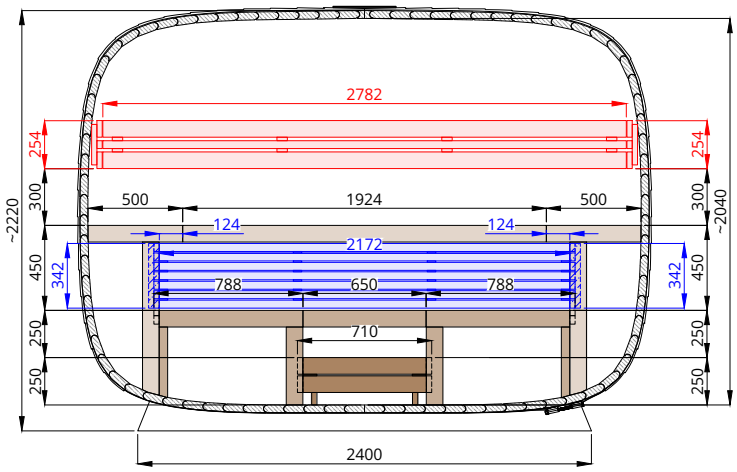


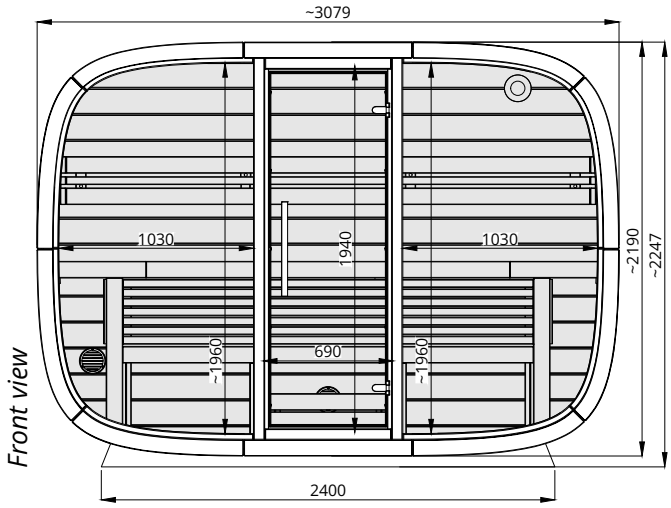


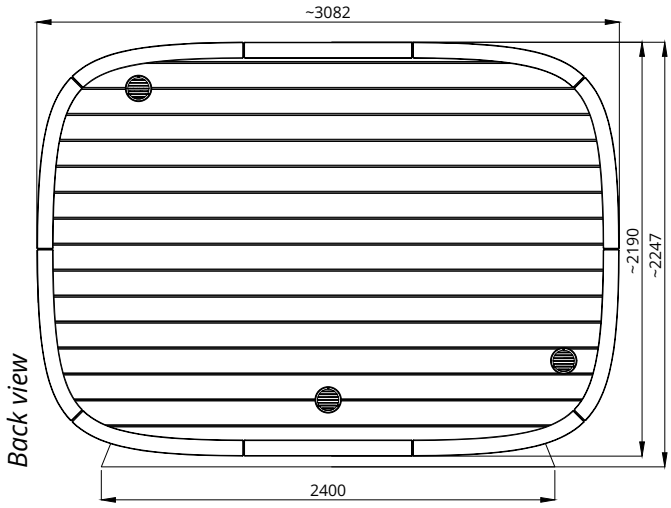


DRW no: RCR